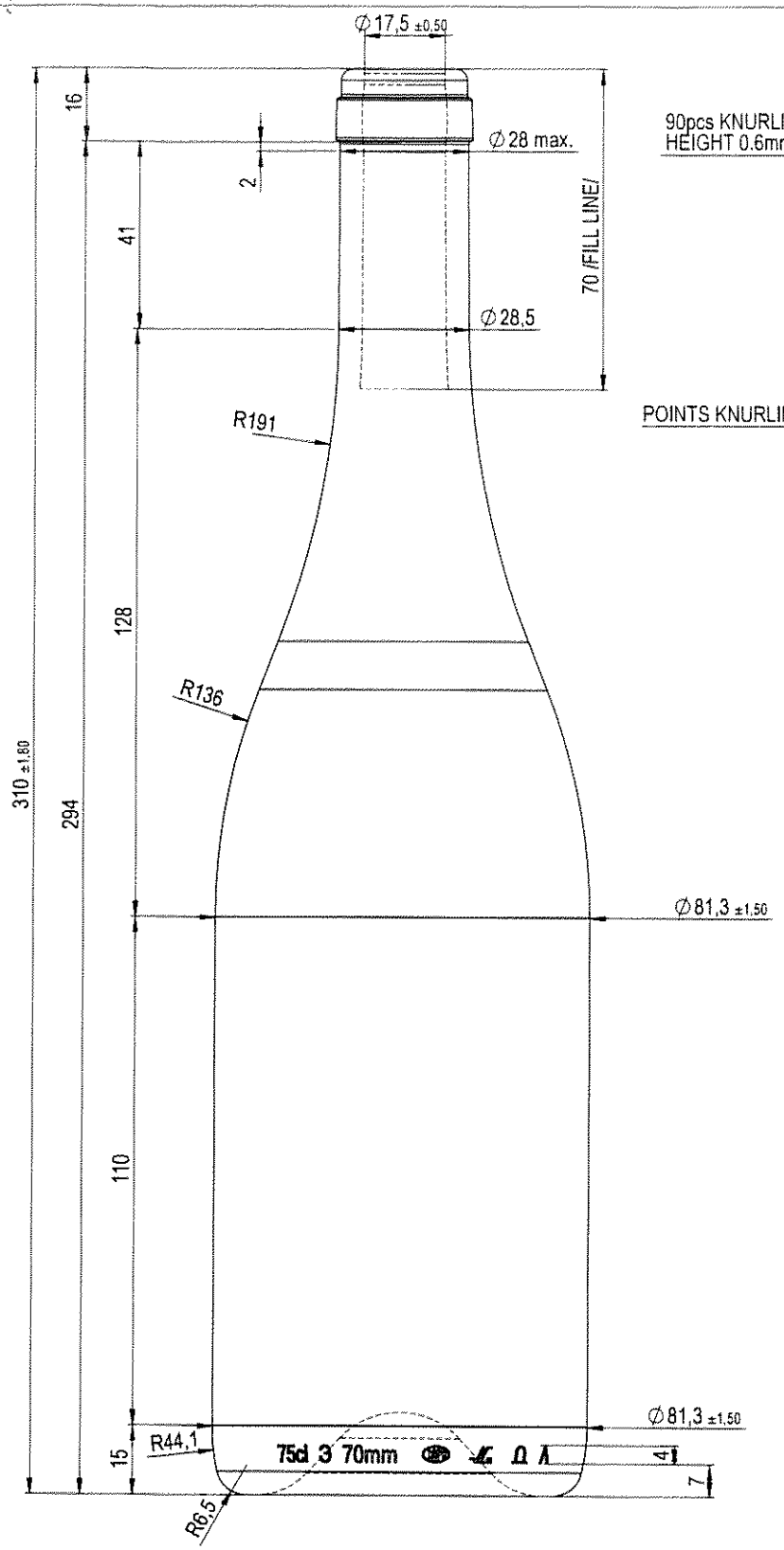

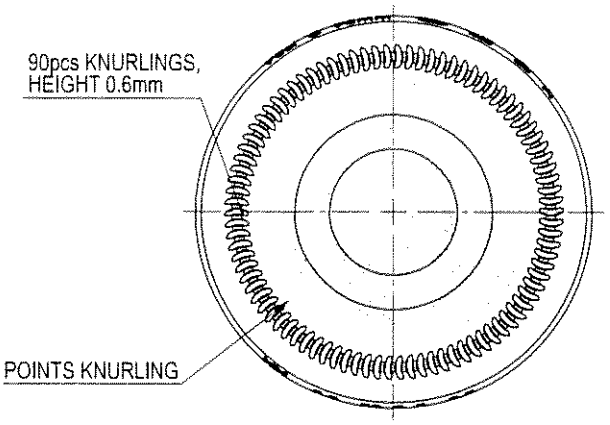

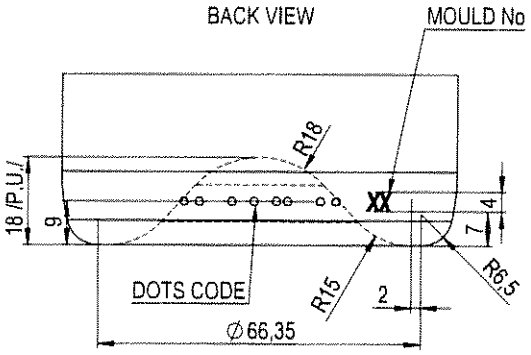

1252000

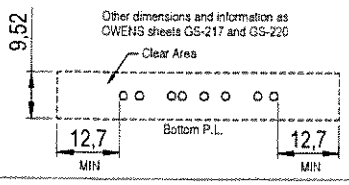

NAME	DATE	REVISIONS	MOLD No	-		A3 BA		
-	-	-	FINISH No	B102				
-	-	-	PROCESS	BB	MACHINE	5 1/2 DG	NAME:	
-	-	-	TYPE	NRB	TIP ANGLE	~ 15.6 °	75cl NUOVA ALTA	
-	-	-	CAP.BRIMF.	769 ± 10ml	REF MOLD	-	CAT.No & DWG No:	
-	-	-	CAP.FILLPT.	750 ± 10ml	FINISH	WINE CORK	2763B102	
-	-	-	FILL LINE	~ 70 mm	DRAWN	LAKERDOV		
-	-	-	WEIGHT	~ 550 g	CHECKED	ANGELOV	DATE	9.2.2015 г.
-	-	-	COLOR	UVAG	CONFIRMED	CHRISTALAS	SHEET 1/1	SCALE: 1:1

CREATED DATE: 26.11.2014